AMERICAN

PERC-RITE® WASTEWATER DRIP DISPERSAL SYSTEMS SEPTIC OR SECONDARY EFFLUENT

NORTH CAROLINA DESIGNERS' GUIDE

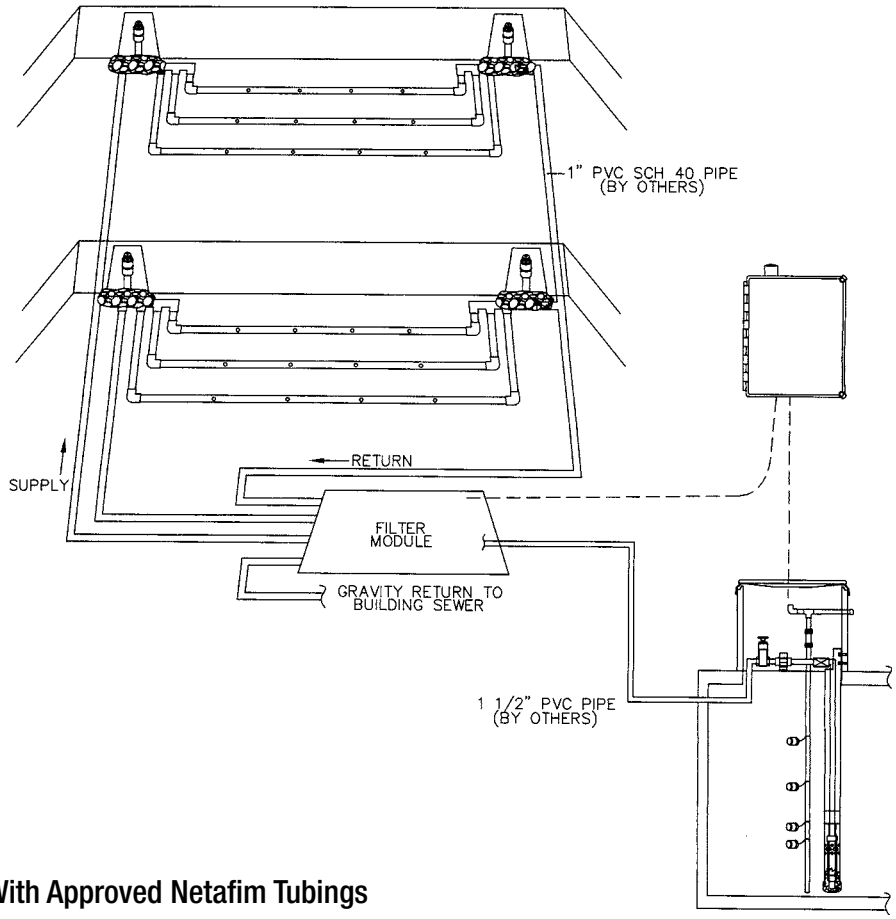

Use With Approved Netafim Tubings

PATENT NO. 5,200,065 PATENT NO. 5,984,574B

PATENT NO. 6,261,452B1

Innovative Technology for the Environmental Age

American Manufacturing Company, Inc. 1-800-345-3132
P.O. Box 549 • Manassas, Virginia 20108-0549

Copyright ©2006

www.americanonsite.com

AMERICAN

Manufacturing Company, Inc.

www.americanonsite.com

DESIGNERS' GUIDE

AMERICAN "PERC-RITE®"

WASTEWATER DRIP SYSTEMS

2 ZONE or 4 ZONE — SIMPLEX or DUPLEX

PATENT NO. 5,200,065 and 5,984,574B

CONTENTS Page

SYSTEM LAYOUT	2
SYSTEM COMPONENTS	3
DESIGN PROCEDURES	4
DESIGNERS' WORKSHEET	5
AREA DELINEATION	6
LOADING RATE TABLE	7
ZONE DETAIL NUMBERING SYSTEM	8
INSTALLATION INSTRUCTIONS	9
15 GPM ZONE DETAIL TABLE	10
12 GPM ZONE DETAIL TABLE	12
RUN TIME TABLES	14
HYDRAULIC PROFILE	16
OPERATION AND MONITORING	19
SYSTEM PACKAGE DETAILS	20
ELECTRICAL AND OPERATIONAL SPECIFICATIONS	22
SUBMITTAL INSTRUCTIONS	23
WARRANTY	24

INTRODUCTION

This ***Perc-Rite® Drip System Designers' Guide*** is for the non-engineer designer. Procedures have been developed to size, layout and design a ***Perc-Rite® Drip*** system using tables instead of performing extensive calculations. The tables have conditions which allow the designer considerable flexibility to layout systems in a variety of siting conditions without being required to do detailed engineering calculations to determine design suitability. When advanced system design is required, outside the limitations of this design procedure, the designer may reference the design manual located on our web site and complete a detailed calculation sheet to determine suitability. Reference ***"www.americanonsite.com".***

The ***Perc-Rite® Drip System*** is a unique fluid handling system for dispersal of effluent wastewater in soil systems. The system incorporates filtration, time and level controlled application and ultra low rate drip distribution. In conditions where aerobic dispersal, such as "Low Pressure Distribution", of septic effluent is required or where land application with the use of conventional soil absorption fields are not acceptable, this system offers a unique method for subsurface distribution of the waste water effluent.

North Carolina regulations require septic or secondary effluent treatment on all systems. ***Preconditioning Treatment requirements for Perc-Rite® Drip Systems*** are minimum. The process will accommodate virtually any type of pretreatment process, aerobic, lagoon, or any type of approved treatment facility. The removal of large settleable solids in sewage is necessary for the successful operation of the system. Local soil and site conditions may require additional treatment for excessive organics, oil and grease or other contaminants.

Copyright ©2006

There is virtually *No Site Disturbance during* installation of the field distribution lines. Typical vibratory plow installation causes very little soil disturbance. The effluent discharge volume from each emitter hole is very small. The system has little site impact even in established lawns or park areas. After installation there are no visible indications that the installation site is being used for disposal. The system is especially suited for landscaped or wooded areas near buildings, trailer parks, apartment complexes or residential subdivisions.

TYPICAL LAYOUT

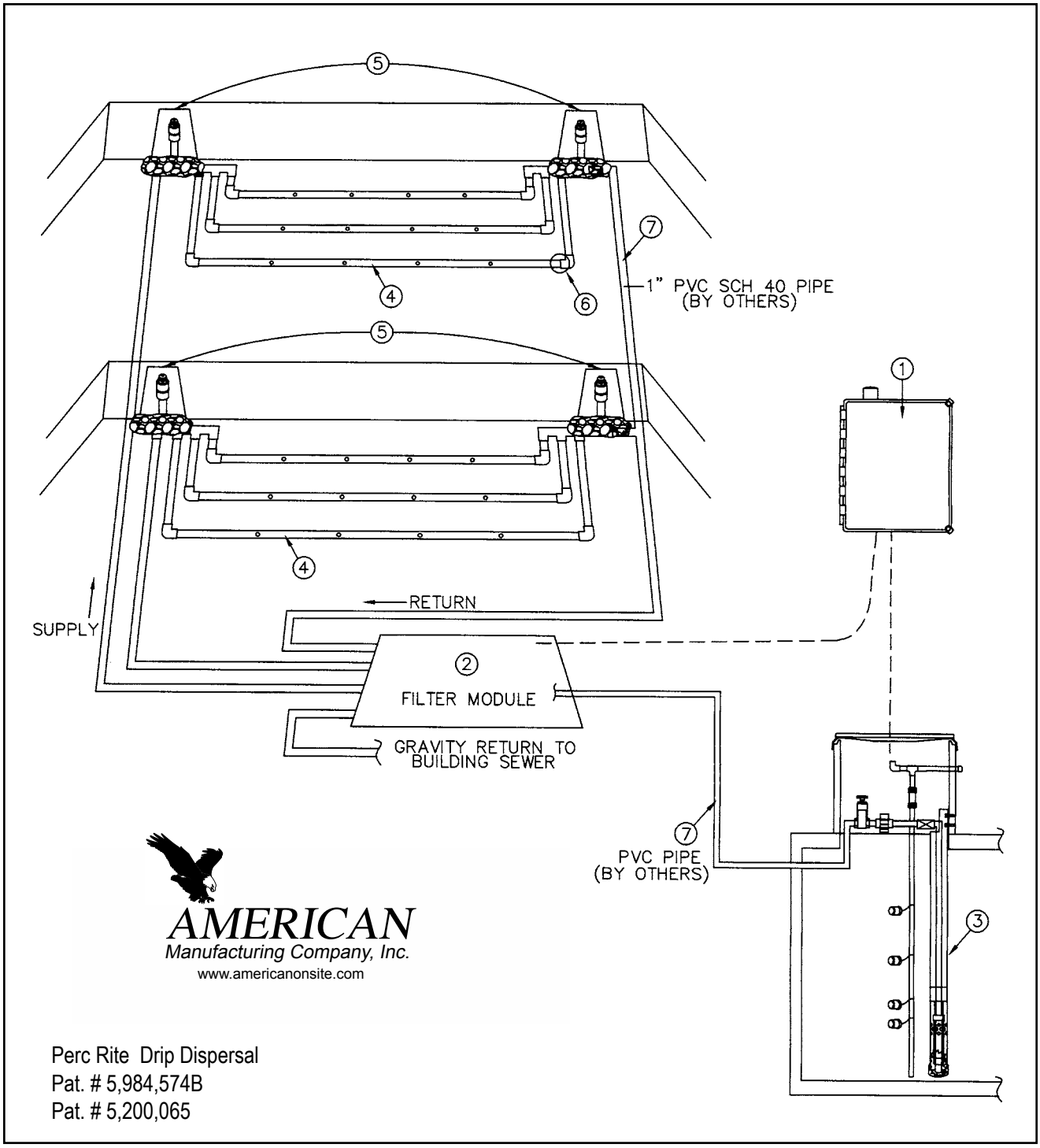

Copyright ©2006

SYSTEM COMPONENTS

1. The **PERC-RITE® DRIP SYSTEM CONTROLLER** is a "state of the art" control panel, activated by level sensing devices (standard mechanical differential float switches) located in a dosing tank downstream from the pretreatment process or processes. When activated by the rising level of effluent in the dosing tank, the controller will enable the dose or dispersal. The system controller on a time clock basis will pump the effluent through the filter module and then to final drip dispersal.

2. **FILTER MODULE** - Disc filters, automatic control valves, solenoid activated diaphragm valves, and a flow meter are assembled in a enclosure (with optional heating) and provided with a labeled wire harness for easy connection to the control panel.

3. **PUMP SYSTEM** - The pump, Cool Guide™, Patent No. 6,261,452B1 and float switches for level indication are provided for installation into the pump tank. The pump is a 15 gpm turbine pump and will be suitable for most residential installations. Reference **lift and distance table** for pumping limits.

4. **DRIPPER TUBING** - The dripper tubing is pressure compensating dripperline for wastewater. The tubing delivers a nominal 0.65 gallons per hour (+/- 5% flow rate from 7 to 60 psi). The tubing functions as a turbulent flow emitter between 0 and 7 psi, ensuring that the nominal design flow is not exceeded at system start-up. The tubing is polyethylene with a 120 psi pressure rating.

5. **TOP FEED MANIFOLD SYSTEM** - The Top Feed Manifolds are located at the highest point in the drip zone and are provided with air release valves to prevent drain down of upper laterals in the zone to lower laterals in the zone, thus preventing saturation of the lower laterals after the pump shuts off. The system provides for the fastest possible pressurization of the zone and the most efficient method of providing drain down control. If the site is flat, Top Feed Manifolds may not be required. Patent No. 5,984,574B.

6. **DRIP FIELD MATERIALS** - All special drip fittings and equipment are supplied by American Manufacturing Company, Inc., including the tubing insert fittings, connectors, flex tube and non- schedule 40 PVC standard fittings.

7. **STANDARD FIELD MATERIALS** - All tanks, wire, standard pipe and fittings are provided by the contractor at the local site. The 1" supply and return pipes, the 1/2" pipe for installation between the top feed manifold system and the laterals and other miscellaneous PVC pipe are to be purchased locally.

Copyright ©2006

DESIGN PROCEDURES

1. **DEMAND ANALYSIS** - Local codes determine the amount of wastewater to design for. Many codes have a safety factor or peak flow factor in the prescribed design flow. Others are based on more of an average usage. In either event, the designer must determine what the peak (design) flow is. The ***Perc-Rite® Drip System*** will disperse the average flow through out each day unless the "Peak " float is enabled, at which time the system will disperse effluent at an accelerated design daily flow rate. Record the number of bedrooms and the peak design flow on ***line 3b*** of the worksheet.

2. **SITE AND SOILS EVALUATION** - Soil and site evaluation is required according to state and local criteria (see page 7). The design loading rate shall be expressed as the "area" and the linear feet of tubing required. The delineated area for installation, effluent quality and the installation depth need to be determined. Long and narrow runs along contour are best. The professional judgement of the evaluator and designer should be used in applying the regulation to determine the wastewater application rate for any specific site. Record the determined soil type on ***line 2*** and selected loading rate area on ***line 7*** of the worksheet.

3. **DELINEATE AREA** - On a site plan or a site sketch, the designer should layout the area of installation on contour. The width along contour should be determined and this distance will determine the necessary down slope distance in order to allocate sufficient total area. The distance down slope will dictate the number of runs which can be installed in the dispersal site. Make sure enough runs can be installed for the total wastewater capacity and the amount of tubing required. Site conditions determine the run separation. Runs can vary from 1 to 3 feet of separation but are more frequently from 1-1/2 to 2 feet on center. The total linear feet of tubing required is recorded on ***line 9***.

4. **SELECT ZONE DETAIL** - Once the area and total tubing length is determined, enter the contour run length in worksheet ***line 4***. A standard zone detail is selected based on the width across contour and the total tubing length. Make sure the needed number of runs can be installed in the delineated area **(see Zone Detail Table)**. Record the selected zone detail on ***line 11.*** If there is not a zone detail with the exact run length, select a zone detail from the column with the next larger run length. Determine the minimum number of runs and record in ***line 10b***. Select the zone detail with the same or more number of runs. For Example, let's say a zone detail using a 15 GPM Standard Zone Detail Table that has 85' runs needs 1800 LF at 2' OC. The minimum runs = 22 (1800 LF tubing / 85 contour RL = 21.17, rounded up to 22 runs). Since there is no system available for 22, scroll down to 24 and record in ***line 10a*** under Calculated (Specified) # runs. The zone detail is a ***Z243*** and the installed spacing between runs will be 1.75' OC. The total linear feet in ***line 13*** is the number of runs for the selected zone detail times ***line 4***. Record the total linear feet per zone provided on ***line 14***. See the ***Zone Detail Table*** (either septic and secondary or secondary only). Also, see the ***Dosing & FF Flow Table.***

5. **LAYOUT SITE -** On a site plan or site sketch show the route for the supply and return pipes. Show the distance the supply and return pipes travel. On a site plan or site sketch show the location of the tanks, filter module and the control panel. Determine the length of supply line run and record on **line 5**. Determine the lift to the field and record on ***line 6.***

6. **DETERMINE SUITABILITY** - Reference the ***Lift and Distance Table***, using the length of run to the farthest field and the number of laterals to verify the layout is suitable for 1" supply and return. If the selected zone detail is included in the zone table and the lift is in excess of the required length of run in the pump table, record a "Yes" in ***line 15*** of the worksheet.

Copyright ©2006

NORTH CAROLINA WORKSHEET - Dispersal system design worksheet for residential systems.

	Y N ( ) ( ) ( ) ( )	Are supply and return pipes 1"? Is the lift to the HU < 8' and the run to the HU < 30' with 1-1/2" pipe?
1	Anaerobic ( ) Aerobic ( )	Effluent Quality
2	_____ Soil Group	Found in column on the Loading Rate Chart (page 7).
3a	_____ GPD	Design quantity of wastewater to disperse.
3b	_____ # of Bedrooms	(120 gallons per bedroom)
4	_____ Contour Run Length	Enter the tubing run length. If run length is not on table, use the actual run length. Example: 85 Ft.
5	_____ Supply LF	Length of supply line between hydraulic unit and farthest zone.
6	_____ Lift ft. Trench	Vertical lift from off level in the pump chamber and highest zone elevation.
7	_____ Area GPD/ft^2 per code	Area loading rate required to treat and disperse wastewater. (See Loading Rate Chart)
8	_____ Area Calculation (ft^2)	Total install area needed to disperse wastewater. (line 3 / line 7)
9	_____ Total LF Tubing	Required total linear feet of tubing to disperse wastewater. (line 8 / 2)
10a	_____ Calculated Runs	Number of runs (line 9 / line 4)
10b	_____ Min. # Runs	Round up to next whole number to determine Min. # Runs. (Reference Zone Detail Table.)
11	_____ Zone Detail	Using Zone Detail Table, select zone detail from column with next higher Contour Run Length (line 4) and with equal or greater # of Runs (line 10b)
12	_____ Max. Lift Allowed	Determine from Lift & Distance Table, cross Supply LF equal to line 5 with the appropriate number of laterals.
13	_____ LF Provided	Total linear feet of tubing provided to disperse wastewater. (# of zones x laterals per zone x runs per lateral x Contour Run Length)
14	_____ LF/Zone	Total linear feet of tubing per zone. (LF Provided / # of zones)
15	Will zone flush? Y N ( ) ( )	If #12 > #6, the system will flush. Reference Lift & Distance Table for pump capacity determined by the length of run to the farthest field and the number of laterals. (For 1" supply and return only)

Copyright ©2006

AREA DELINEATION

A complete site evaluation includes a surface characterization of topographic features and horizontal setbacks, a subsurface (soil) evaluation, and the accurate delineation of the soil absorption area. This delineation is best performed by the site evaluator. The area should be marked and measured in the field to insure protection of the area and a representative final absorption area design. Tools required would include a measuring tape to dimension the site, stakes to delineate the area and a leveling device such as a builders level, lock level, or clinometer to determine contour.

Care should be exercised to insure accuracy on sites with limited area and those that are topographically complex. It is important to minimize site skewing, account for topographic contour wrapping and verify available area. The header ditch(es) area should be as perpendicular to topographic contour as possible.

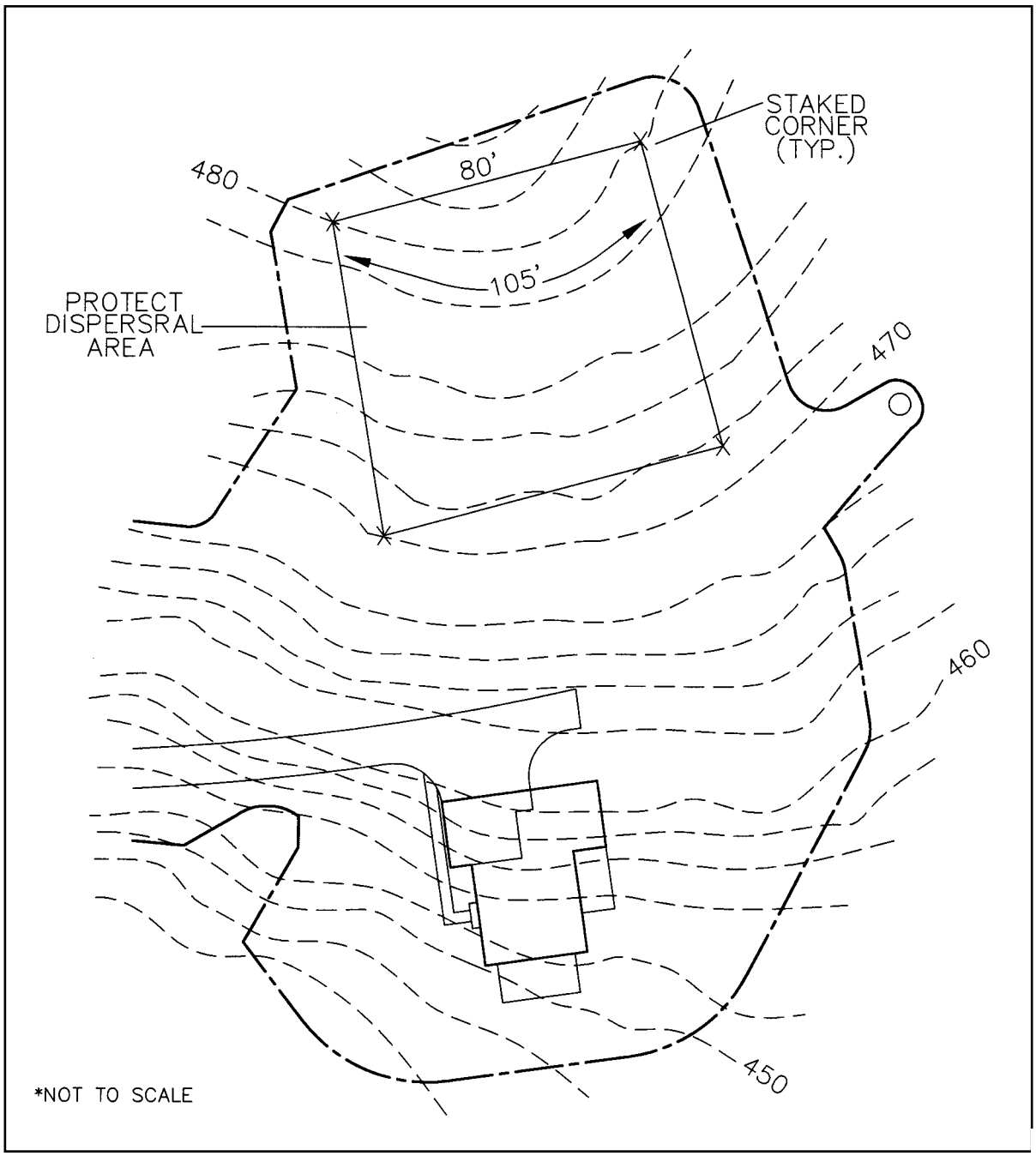

AMERICAN MANUFACTURING
1-800-345-3132 • www.americanonsite.com

NORTH CAROLINA

LOADING RATE CHART

For ***AMERICAN*** Perc-Rite® Drip Systems.

American Manufacturing Company, Inc.

1-800-345-3132 www.americanonsite.com

System Sizing:

a. The following table shall be used in determining the long-term acceptance rate (LTAR) for the American Perc-Rite® Subsurface Drip System. The LTAR shall be based on the most hydraulically limiting soil horizon within 18 inches of the naturally occurring ground surface or to a depth of one foot below drip tubing, whichever is deeper.

Soil Group	Soil Textural Classes (USDA Classification)	Soil Textural Classes (USDA Classification)	LTAR (area basis) (gpd/Ft^2)	
			Anaerobic	Aerobic
I.	Sands (with S or PS structure and clay mineralogy)	Sand Loamy Sand	0.5 - 0.3	1.0 - 0.6
II.	Coarse Loams (with S or PS structure and clay mineralogy)	Sandy Loam Loam	0.3 - 0.2	0.6 - 0.4
III.	Fine Loams (with S or PS structure and clay mineralogy)	Sandy Clay Loam Loam Silt Loam Clay Loam Silty Clay Loam Silt	0.2 - 0.1	0.4 - 0.15
IV.	Clays (with S or PS structure and clay mineralogy)	Sandy Clay Silty Clay Clay	0.1 - 0.04	0.15 - 0.05

The long-term acceptance rate for Systems in Soil Groups I and II shall not exceed the mean rate for the applicable soil group if the initial vertical separation siting criteria or vertical separation distances for trench bottoms specified in Rules .1955(m), 1956 or 1957 have been reduced, based upon the use of an Approved Pressure-Dosed Sand Filter, or Peat Filter, or comparable Approved Innovative Pretreatment System.

b. The following table shall be used in determining the LTAR for the American Perc-Rite® Subsurface Drip Systems installed in saprolite pursuant to Rule .1956(6). The LTAR shall be based on the most hydraulically limiting, naturally occurring saprolite to a depth of two feet below the drip tubing.

Saprolite Group	Saprolite Textural Classes	Saprolite Textural Classes	LTAR (area basis) (gpd/Ft^2)	
			Anaerobic	Aerobic
I.	Sands	Sand Loamy Sand	0.4 - 0.3 0.35 - 0.25	0.6 - 0.4 0.5 - 0.3
II.	Loams	Sandy Loam Loam Silt Loam	0.3 - 0.2 0.2 - 0.1 0.15 - 0.05	0.4 - 0.25 0.3 - 0.2 0.2 - 0.07

c. In calculating the number of square feet for the drainfield, the design daily sewage flow rate shall be divided by the long-term acceptance rate determined from the appropriate table above.

d. In calculating the minimum length of drip tubing to be used, the total square footage of drainfield shall be divided by two feet.

Copyright ©2006

ZONE DETAIL NUMBERING SYSTEM

Each zone is designated by a "Z" indicating it is a Zone Detail Designation followed by three groups of numbers, the first is the number of zones, the second is the number of laterals per zone, the third is the runs per lateral.

_____	_____	_____	_____
Z = Zone	# Zones	# Laterals	# Runs/Lat

EXAMPLE 1

___Z____	___1____	___2____	___2____
Z = Zone	# Zones	# Laterals	# Runs/Lat

This example shows a one zone detail with two laterals per zone and two runs per lateral.

ZONE DETAIL SELECTION PROCEDURE

Reference the site plan layout to determine the width across contour of the delineated area. From the site and soils evaluation determine the total amount of tubing required. The area divided by two is the total linear feet of tubing required. The total linear feet of tubing divided by the length across contour equals the minimum number of runs. The total number of linear feet of tubing and runs will typically be more than the minimum since the preferred layout for flushing the supply and return lines will typically result in more than the minimum tubing.

Increasing the number of runs in order to install a standard zone configuration is encouraged. This provides an additional safety factor to the tubing interface loading rate. Use the following step by step procedure to select a zone detail.

1. Determine width across contour.
2. Determining number of runs that can be installed in area.
3. Select a standard zone detail from under the column for contour with which has enough tubing to satisfy total tubing requirements.
4. In the event more runs are needed to yield enough tubing for the site, the tubing may be placed closer than 2' on center.

EXAMPLE 2
(Using 12gpm Semi Automatic Zone Detail Table on Page 12)
This configure does not work for the ASD 15

Contour width	=	100 Feet
Tubing required	=	700 Linear Feet

From the table, the linear feet of tubing provided in 100 foot runs will be between 600 LF and 800 LF. Therefore select 8 runs for 800 LF. The zone detail could be;

___Z____	___1____	___4____	___2____
Z = Zone	# Zones	# Laterals	# Runs/Lat

Z142

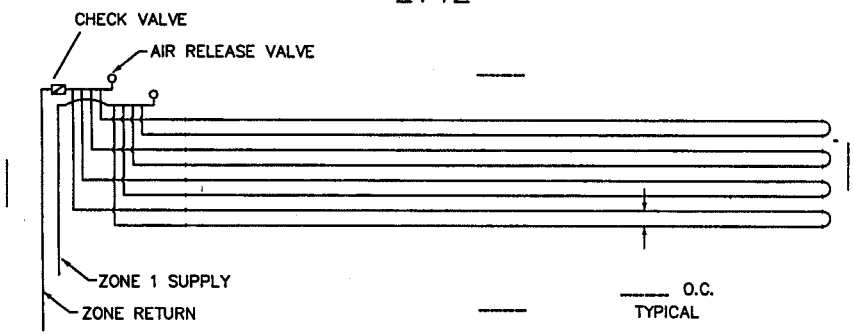

Copyright ©2006

INSTALLATION INSTRUCTIONS

1. Prepare field location for installation. Verify contour and design. No wet weather installation. No activity on drainfield other than minimum to install system. Clearing of vegetation to be performed with minimal site disturbance. Do not park equipment or store materials on drainfield area.
2. Set pretreatment and pump tanks.
3. Dig header ditch for field manifold.
4. Install dripper tubing. Horizontal spacing between dripper lines shall be as specified and installation depth shall be as specified. Install on contour.
5. Install loops (flex tubing) and construct field supply / return manifolds. All PVC pipe and fittings shall be PVC SCH 40 type 1 rated for pressure applications. All glued joints shall be cleaned and primed with purple (dyed) PVC primer prior to being glued. All cutting of PVC pipe, flexible PVC and/or dripper tubing shall be accomplished with pipe cutters. Sawing of PVC pipe, flexible PVC and/or dripper tubing shall be followed by cleaning all shavings or sawing shall not be allowed. All open PVC pipe, flexible PVC and/or dripper tubing in the work area shall have the ends covered with duct tape during construction to prevent construction debris from entering the pipe. Prior to gluing all glue joints shall be inspected for and cleared of construction debris.
6. Dig ditches for conveyance lines, pump supply line, and flush return line. Install. Connect supply / return lines with manifolds.
7. Place Central Unit and mount control panel. Connect conveyance, supply, and flush return lines to hydraulic unit.
8. Set switch tree in pump tank.
9. Install electrical (and phone line if applicable). Check power supply and power up unit.
10. Provide one day volume of clean water for startup. Prior to startup of the drip disposal system the air release valves shall be removed and each zone in the system shall be flushed as follows: a) using an appropriate length of flexible PVC pipe with a male fitting attached to the air release connection to direct the flushing away from the construction are, b) flush the zone with a volume of water (clean water to be provided by contractor) equal to 1.5 times the volume of the pipes from the central unit to the air release valve, c) repeat this procedure for each zone (the flushing of the system is accomplished by manual override of the control panel by the manufacturer or engineer.) Once completed replace and glue air relief valves.

    If existing septic tanks are to be used, they shall be pumped out by a commercial septic tank pumper, checked for leakage or other problems, and replaced if necessary. After the tank is emptied, the tank shall be rinsed, pumped, and refilled with clean water. Debris in septic tank shall be kept to a minimum since it could clog the disk filters during startup. (Disk filters are not backflushed during startup and any clogging could cause incorrect rate of flow readings for the controller.)
11. Pressure check all fittings and lines. Inspect field and loops. Find leaks and repair.
12. Check setup values against calculated values. Set run time for Central Unit.
13. Backfill once lines and fields are determined to have no leaks. Back filling is to be controlled to prevent the damaging of pipes or fittings. Once completed, drainfield area should be graded to shed surface water with additional clean soil as necessary. Establish fescue or other turf cover, cut long (6-8”).
14. In cold weather climates, installer should follow all “cold weather installation” techniques. Refer to local standards.

Copyright ©2006

Copyright ©2006

AMERICAN

PERC-RITE® ZONE DETAIL TABLE

15 GPM AUTOMATIC DRIP SYSTEMS: 24" EMITTER SPACING

Length Across Contour

RUN LENGTH	50´		75´		100´		125´		150´		200´		225´		250´		300´	
#RUN	ZD	LF	ZD	LF	ZD	LF	ZD	LF	ZD	LF	ZD	LF	ZD	LF	ZD	LF	ZD	LF
4																	Z221	1200
5																		
6											Z231	1200	Z231	1350	Z231	1500	Z231 Z321	1800 1800
7																		
8									Z222	1200	Z241	1600	Z241	1800	Z241	2000	Z241	2400
9											Z331	1800	Z331	2025	Z331	2250	Z331	2700
10							Z251	1250	Z251	1500	Z251	2000	Z251	2250				
11																		
12					Z223 Z232	1200 1200	Z232	1500	Z232 Z322	1800 1800	Z341 Z431	2400 2400	Z341 Z431	2700 2700	Z341 Z431	3000 3000	Z341 Z431	3600 3600
13																		
14					Z271	1400												
15							Z351	1875	Z351	2250	Z351	3000	Z351	3375				
16			Z224	1200	Z242	1600	Z242	2000	Z242 Z422	2400 2400	Z441	3200	Z441	3600	Z441	4000	Z441	4800
17																		
18			Z233	1350	Z233 Z323	1800 1800	Z332	2250	Z332	2700								
19																		
20			Z252	1500	Z252	2000	Z451	2500	Z451	3000	Z451	4000	Z451	4500				
21					Z371	2100												
22																		
23																		
24	Z226	1200	Z234 Z324	1800 1800	Z243 Z342 Z423	2400 2400 2400	Z342 Z432	3000 3000	Z342 Z432	3600 3600								
25																		
26																		
27			Z333	2025	Z333	2700												
28	Z272	1400			Z471	2800												
29																		
30	Z235	1500	Z253 Z352	2250 2250	Z352	3000												
31																		
32	Z244	1600	Z244 Z424	2400 2400	Z442	3200	Z442	4000	Z442	4800								
33																		
34																		
35																		
36	Z236 Z326	1800 1800	Z334 Z433	2700 2700	Z343 Z433	3600 3600												
37																		
38																		
39																		
40	Z254	2000	Z452	3000	Z452	4000												
41																		
42	Z372	2100																
43																		
44																		
45	Z335	225	Z353	3375														
46																		
47																		
48	Z246 Z344	2400 2400	Z344 Z434	3600 3600	Z443	4800												

DOSING & FF FLOW TABLE (GPM)

15 GPM AUTOMATIC DRIP SYSTEMS: 24" EMITTER SPACING

LF/ ZONE	GPM DOSE RATE	FF NO. LATS	FF NO. LATS	FF NO. LATS	FF NO. LATS	FF NO. LATS	FF NO. LATS
		2	3	4	5	6	7
600	3.3	6.5	8.1	9.7	11.3	12.9	14.5
650	3.5	6.7	8.3	9.9	11.5	13.1	14.7
700	3.8	7.0	8.6	10.2	11.8	13.4	15.0
750	4.1	7.3	8.9	10.5	12.1	13.7	15.3
800	4.3	7.5	9.1	10.7	12.3	13.9	15.5
850	4.6	7.8	9.4	11.0	12.6	14.2	15.8
900	4.9	8.1	9.7	11.3	12.9	14.5	16.1
950	5.1	8.3	9.9	11.5	13.1	14.7	16.3
1000	5.4	8.6	10.2	11.8	13.4	15.0	16.6
1050	5.7	8.9	10.5	12.1	13.7	15.3	16.9
1100	6.0	9.2	10.8	12.4	14.0	15.6	17.2
1150	6.2	9.4	11.0	12.6	14.2	15.8	17.4
1200	6.5	9.7	11.3	12.9	14.5	16.1	17.7

PERC-RITE® LIFT & DISTANCE TABLE - 15 GPM AUTOMATIC DRIP SYSTEMS: 24" EMITTER SPACING

LIFT & DISTANCE TABLE INSTRUCTIONS

1. The vertical lift is the elevation difference between the "Off Level Float" and the highest point in any drip zone.
2. The supply/return line column is the distance from the filter to the farthest drip zone.
3. The diameter of the pipe from the pump tank to the filter unit is 1-1/2" minimum.
4. All zone supply and return pipes are 1".
5. The flush return pipe from the filter box to the pretreatment tank is 1-1/2" gravity.
6. The maximum distance from the pump tank to the filter valve box is 30' and the vertical lift from the pump chamber to the filter valve box is 8'.
7. These tables may be used with the appropriate Perc-Rite® zone detail table only. An engineering calculation sheet (not included herein) must be filled out for any other configuration.
8. Top feed manifolds must be used when any discernible slope is encountered.
9. Remote zone valves are needed when pumping downhill from the filter. For aid in this application call American Manufacturing.
10. Return pressure assembly is needed when lift from filters to zones is greater than 10'.

LIFT & DISTANCE TABLE
15 GPM AUTOMATIC DRIP SYSTEMS: 24: EMITTER SPACING

Maximum Static Lift ("Off Level Float" to Drip Field)							
Line #	Supply/						
	Return Line	2-Lat	3-Lat	4-Lat	5-Lat	6-Lat	7-Lat
	(feet)	300'	300'	300'	240'	165'	100'
1	100	75	65	52	51	55	54
2	150	73	61	46	43	47	45
3	200	71	58	40	35	38	36
4	250	69	54	33	28	29	26
5	300	67	50	27	20	21	17
6	350	65	47	21	12	12	8
7	400	63	43	15	4	3	
8	450	61	40	9			
9	500	59	36	3			
10	550	57	32				
11	600	55	29				
12	650	53	25				
13	700	51	22				
14	750	49	18				
15	800	47	14				
16	850	45	11				
17	900	43	7				
18	950	41	4				
19	1000	39					

Copyright ©2006

Copyright ©2006

AMERICAN

PERC-RITE® ZONE DETAIL TABLE

12 GPM SEMI-AUTOMATIC DRIP SYSTEMS: 24" EMITTER SPACING

Length Across Contour

RUN LENGTH	50'		75'		100'		125'		150'		200'		225'		250'		300'	
# RUNS	ZD	LF	ZD	LF	ZD	LF	ZD	LF	ZD	LF	ZD	LF	ZD	LF	ZD	LF	ZD	LF
2											Z121	400	Z121	450	Z121	500	Z121	600
3									Z131	450	Z131	600	Z131	675	Z131	750	Z131	900
4					Z122 Z141	400 400	Z122 Z141	500 500	Z122 Z141	600 600	Z141 Z221	800 800	Z141 Z221	900 900	Z141 Z221	1000 1000	Z221	1200
5					Z151	500	Z151	625	Z151	750								
6			Z123 Z132	450 450	Z123 Z132	600 600	Z132	750	Z132 Z231	900 900	Z231	1200	Z231	1350	Z231	1500	Z231	1800
7																		
8	Z124 Z142	400 400	Z124 Z142	600 600	Z142 Z222 Z241	800 800 800	Z142 Z222 Z241	1000 1000 1000	Z222 Z241	1200 1200	Z241	1600	Z241	1800	Z241	2000		
9	Z133	450	Z133	675	Z133	900												
10	Z125 Z152	500 500	Z152	750	Z251	1000	Z251	1250	Z251	1500								
11																		
12	Z126 Z134 Z143	600 600 600	Z134 Z143 Z223 Z232	900 900 900 900	Z223 Z232	1200 1200	Z232	1500	Z232	1800								
13																		
14																		
15	Z135 Z153	750 750																
16	Z144 Z224 Z242	800 800 800	Z224 Z242	1200 1200	Z242	1600	Z242	2000										
17																		
18	Z136 Z233	900 900	Z233	1350	Z233	1800												
19																		
20	Z145 Z225 Z252	1000 1000 1000	Z252	1500														
22																		
24	Z226 Z234 Z243	1200 1200 1200	Z234 Z243	1800 1800														
26																		
28																		
30	Z235 Z253	1500 1500																
32	Z244	1600																
34																		
36	Z236	1800																
38																		
40	Z245	2000																

DOSING & FF FLOW TABLE (GPM)

12 GPM SEMI-AUTOMATIC DRIP SYSTEMS: 24" EMITTER SPACING

LF/ZONE	GPM DOSE RATE	FF NO. LATS. 2	FF NO. LATS. 3	FF NO. LATS. 4	FF NO. LATS. 5
400	2.2	5.4	7.0	8.6	10.2
450	2.4	5.6	7.2	8.8	10.4
500	2.7	5.9	7.5	9.1	10.7
550	3.0	6.2	7.8	9.4	11.0
600	3.3	6.5	8.1	9.7	11.3
625	3.4	6.6	8.2	9.8	11.4
650	3.5	6.7	8.3	9.9	11.5
675	3.7	6.9	8.5	10.1	11.7
700	3.8	7.0	8.6	10.2	11.8
750	4.1	7.3	8.9	10.5	12.1
800	4.3	7.5	9.1	10.7	12.3
850	4.6	7.8	9.4	11.0	12.6
900	4.9	8.1	9.7	11.3	12.9
950	5.1	8.3	9.9	11.5	13.1
1000	5.4	8.6	10.2	11.8	13.4

PERC-RITE® LIFT & DISTANCE TABLE - 12 GPM SEMI-AUTOMATIC DRIP SYSTEMS: 24" EMITTER SPACING

LIFT & DISTANCE TABLE QUALIFICATIONS

1. The vertical lift is the elevation difference between the "Off Level Float" and the highest point in any drip zone.
2. The supply/return line column is the distance from the filter to the farthest drip zone.
3. The diameter of the pipe from the pump tank to the filter unit is 1-1/2" minimum.
4. All zone supply and return pipes are 1".
5. The flush return pipe from the filter box to the pretreatment tank is 1-1/2" gravity.
6. The maximum distance from the pump tank to the filter valve box is 30' and the vertical lift from the pump chamber to the filter valve box is 8'.
7. These tables may be used with the appropriate Perc-Rite® zone detail table only. An engineering calculation sheet (not included herein) must be filled out for any other configuration.
8. Top feed manifolds must be used when any discernible slope is encountered.
9. Remote zone valves are needed when pumping downhill from the filter. For aid in this application call American Manufacturing.
10. Return pressure assembly is needed when lift from filters to zones is greater than 10'.

LIFT & DISTANCE TABLE - 12 GPM SEMI-AUTOMATIC PERC-RITE® DRIP SYSTEMS: 24" EMITTER SPACING

Maximum Static Lift ("Off Level Float" to Drip Field)

Table A: STANDARD QM LIFT & DISTANCE TABLE

Line #	Supply/ Return Line (feet)	2-Lat 300'	3-Lat 300'	4-Lat 250'	5-Lat 150'
1	100	77	60	55	63
2	150	75	56	50	57
3	200	73	53	45	51
4	250	71	49	39	45
5	300	69	46	34	40
6	350	67	42	29	34
7	400	65	38	23	28
8	450	63	35	18	22
9	500	61	31	13	16
10	550	59	28	7	
11	600	57	24	2	
12	650	55	20		
13	700	53	17		
14	750	51	13		
15	800	49	10	**Note:**	
16	850	47	6	**Use Table B**	
17	900	45		**when using**	
18	950	43		**Hydro Seq**	
19	1000	41		**Valve**	

Table B: QM w/ HYDRO SEQ DISTRIBUTING VALVE

Line #	Supply/ Return Line (feet)	2-Lat 300'	3-Lat 300'	4-Lat 250'	5-Lat 150'
1	100	61	60	55	61
2	150	58	56	50	57
3	200	56	53	45	51
4	250	53	49	39	45
5	300	50	46	34	40
6	350	47	42	29	34
7	400	44	38	23	28
8	450	42	35	18	22
9	500	39	31	13	16
10	550	36	28	7	
11	600	33	24	2	
12	650	30	20		
13	700	28	17		
14	750	25	13		
15	800	22	10	**Note:**	
16	850	19	6	**Use this table**	
17	900	16		**when using**	
18	950	14		**Hydro Seq**	
19	1000	11		**Valve**	

Copyright ©2006

Copyright ©2006

RUN TIME TABLES: 15 GPM AUTOMATIC PERC-RITE® DRIP SYSTEMS

The run time tables are based on the gallons per day the system is designed for. The run time numbers are based on the **average daily flow rate**. Selecting the run time is the last design step that is performed. Based on the number of zones and the number of laterals per zone, the run time is selected based on the average gallons per day. For even distribution and minimizing draindown events, the run time is calculated to provide from **3 to 5 times the volume of drip tubing** plus the top feed manifolds. Therefore, the number of doses per day per zone will vary in order to maintain optimum dispersal.

American Manufacturing 2-Zone								3-Zone						4-Zone					
		2-Lat	3-Lat	4-Lat	5-Lat	6-Lat	7-Lat	2-Lat	3-Lat	4-Lat	5-Lat	6-Lat	7-Lat	2-Lat	3-Lat	4-Lat	5-Lat	6-Lat	7-Lat
		300’	300’	300’	240’	165’	100’	300’	300’	300’	240’	165’	100’	300’	300’	300’	240’	165’	100’
Design GPD	Avg. GPD	3.25	4.875	6.5	6.5	5.4	3.8	3.25	4.875	6.5	6.5	5.4	3.8	3.25	4.875	6.5	6.5	5.4	3.8
		Min/ Dose	Min/ Dose	Min/ Dose	Min/ Dose	Min/ Dose	Min/ Dose	Min/ Dose	Min/ Dose	Min/ Dose	Min/ Dose	Min/ Dose	Min/ Dose	Min/ Dose	Min/ Dose	Min/ Dose	Min/ Dose	Min/ Dose	Min/ Dose
300	**180**	7.48	7.69	5.53	5.41	6.51	5.35	7.48	10.76	7.84	7.72	9.30	5.35	12.10	7.69	5.53	5.41	6.51	9.31
320	**192**	5.64	8.30	6.00	5.87	7.07	5.88	8.10	11.58	8.46	8.33	10.05	5.88	5.64	8.30	6.00	5.87	7.07	10.10
340	**204**	6.10	8.92	6.46	6.33	7.63	6.41	8.71	12.40	9.07	8.95	10.80	6.41	6.10	8.92	6.46	6.33	7.63	10.89
360	**216**	6.56	5.84	6.92	6.79	8.18	4.56	5.64	5.84	9.69	9.56	11.54	6.93	6.56	9.53	6.92	6.79	8.18	4.56
380	**228**	7.02	6.25	7.38	7.25	5.20	4.96	6.05	6.25	10.30	10.18	5.20	7.46	7.02	10.15	7.38	7.25	8.74	4.96
400	**240**	7.48	6.66	7.84	7.72	5.57	5.35	6.46	6.66	10.92	10.79	5.57	7.99	7.48	10.76	7.84	7.72	9.30	5.35
420	**252**	7.95	7.07	8.30	8.18	5.95	5.75	6.87	7.07	11.53	11.41	5.95	4.82	7.95	11.38	8.30	8.18	9.86	5.75
440	**264**	8.41	7.48	8.76	8.64	6.32	6.14	7.28	7.48	12.15	12.02	6.32	5.18	8.41	11.99	8.76	8.64	10.42	6.14
450	**270**	8.64	7.69	9.00	8.87	6.51	6.34	7.48	7.69	12.46	12.33	6.51	5.35	8.64	12.30	9.00	8.87	10.70	6.34
460	**276**	8.87	7.89	5.69	9.10	6.69	6.54	7.69	7.89	12.76	12.64	6.69	5.53	8.87	12.61	9.23	9.10	10.98	6.54
480	**288**	9.33	5.84	6.00	5.87	7.07	6.93	5.64	8.30	6.00	5.87	7.07	5.88	5.64	5.84	9.69	9.56	11.54	6.93
500	**300**	9.79	6.15	6.30	6.18	7.44	7.33	5.95	8.71	6.30	6.18	7.44	6.23	5.95	6.15	10.15	10.02	12.10	7.33
520	**312**	10.25	6.46	6.61	6.48	5.39	7.73	6.25	5.57	6.61	6.48	7.81	6.58	6.25	6.46	10.61	10.48	5.39	7.73
540	**324**	10.71	6.76	6.92	6.79	5.67	8.12	6.56	5.84	6.92	6.79	8.18	4.56	6.56	6.76	11.07	10.95	5.67	4.56
560	**336**	11.18	7.07	7.23	7.10	5.95	8.52	6.87	6.11	7.23	7.10	8.56	4.82	6.87	7.07	11.53	11.41	5.95	4.82
580	**348**	11.64	7.38	7.53	7.41	6.23	8.91	7.18	6.39	7.53	7.41	5.33	5.09	7.18	7.38	12.00	11.87	6.23	5.09
600	**360**	12.10	7.69	7.84	7.72	6.51	9.31	7.48	6.66	7.84	7.72	5.57	5.35	7.48	7.69	12.46	12.33	6.51	5.35
620	**372**	12.56	7.99	5.76	5.64	6.79	9.70	7.79	6.93	8.15	8.02	5.82	5.62	5.41	7.99	5.76	5.64	6.79	5.62
640	**384**	13.02	8.30	6.00	5.87	7.07	10.10	8.10	7.21	8.46	8.33	6.07	5.88	5.64	8.30	6.00	5.87	7.07	5.88
660	**396**	13.48	8.61	6.23	6.10	7.35	10.49	8.41	7.48	8.76	8.64	6.32	6.14	5.87	8.61	6.23	6.10	7.35	6.14
680	**408**	13.95	8.92	6.46	6.33	7.63	10.89	8.71	7.75	9.07	8.95	6.57	6.41	6.10	8.92	6.46	6.33	7.63	6.41
700	**420**	14.41	9.22	6.69	6.56	7.90	11.29	9.02	5.63	5.79	5.66	6.82	6.67	6.33	5.63	6.69	6.56	7.90	6.67
720	**432**	14.87	9.53	6.92	6.79	8.18	11.68	9.33	5.84	6.00	5.87	7.07	6.93	6.56	5.84	6.92	6.79	8.18	4.56
750	**450**	15.56	9.99	7.26	7.14	8.60	12.28	9.79	6.15	6.30	6.18	7.44	7.33	6.91	6.15	7.26	7.14	8.60	4.86
Total LF in		1200	1200	1200	1200	990	700	1200	1200	1200	1200	990	700	1200	1200	1200	1200	1200	990

STANDARD & PEAK REST TIMES TO BE SET AT SYSTEM START-UP

		2 ZONE Rest Time		3 ZONES Rest Time		4 ZONES Rest Time	
		Standard (min)	Peak (min)	Standard (min)	Peak (min)	Standard (min)	Peak (min)
4	Doses/day/zone	180	108	120	72	90	54
3	Doses/day/zone	240	144	160	96	120	72
2	Doses/day/zone	360	216	240	144	180	108
1	Doses/day/zone	720	432	480	288	360	216

AMERICAN
1-800-345-3132 • www.americanonsite.com

RUN TIME TABLES: 12 GPM SEMI-AUTOMATIC PERC-RITE® DRIP SYSTEMS

The run time tables are calculated for achieving the best distribution of the **average daily flow** in gallons per day the system is designed for. Selecting the run time is the last design step that is performed and is based on the number of zones and the number of laterals per zone. The run time should result in even distribution and minimizing draindown events. The run time is calculated to provide from **3 to 7 times the volume of drip tubing** plus the top feed manifolds. Therefore, the number of doses per day per zone will vary in order to maintain optimum dispersal.

AMERICAN MANUFACTURING - "QM" SERIES 1-ZONE

	Laterals/Zone:	2-Lat	3-Lat	4-Lat	5-Lat
	Lateral Length:	300'	300'	250'	150'
Design GPD	Avg. GPD	GPM: 3.25	4.875	5.417	4.063
		Min./dose	Min./dose	Min./dose	Min./dose
300	**180**	7.48	5.84	6.73	6.84
320	**192**	8.10	6.33	7.29	7.43
340	**204**	8.71	6.82	7.84	8.02
360	**216**	9.33	5.84	8.40	8.61
380	**228**	9.95	6.25	8.95	9.20
400	**240**	8.80	6.66	9.50	9.79
420	**252**	9.33	7.07	10.06	8.31
440	**264**	9.86	7.48	8.17	8.80
450	**270**	10.12	7.69	8.40	9.05
460	**276**	8.87	7.89	8.62	9.30
480	**288**	9.33	8.30	9.06	9.79
500	**300**	9.79	8.71	9.50	8.52
520	**312**	10.25	9.12	9.95	8.94
540	**324**	10.71	9.53	10.39	9.37
560	**336**	11.18	9.94	8.76	9.79
580	**348**	11.64	10.35	9.13	8.68
600	**360**	12.10	9.00	9.50	9.05
620	**372**	12.56	9.36	9.87	9.42
640	**384**	13.02	9.71	10.24	9.79
660	**396**	13.48	10.06	8.87	10.16
680	**408**	13.95	10.41	9.19	10.53
700	**420**	14.41	10.76	9.50	10.90
720	**432**	14.87	11.11	9.82	11.27
750	**450**	15.56	11.64	10.29	11.82
TOTAL L.F. IN ZONE=		600	900	1000	750

AMERICAN MANUFACTURING - "QM" SERIES 2-ZONE

	Laterals/Zone:	2-Lat	3-Lat	4-Lat	5-Lat
	Lateral Length:	300'	300'	250'	150'
Design GPD	Avg. GPD	GPM: 3.25	4.875	5.417	4.063
		Min./Dose	Min./dose	Min./dose	Min./dose
300	**180**	7.48	7.69	6.73	5.36
320	**192**	8.10	8.30	7.29	5.85
340	**204**	8.71	8.92	7.84	6.34
360	**216**	9.33	5.84	8.40	6.84
380	**228**	9.95	6.25	8.95	7.33
400	**240**	10.56	6.66	5.81	7.82
420	**252**	11.18	7.07	6.18	8.31
440	**264**	11.79	7.48	6.55	8.80
450	**270**	12.10	7.69	6.73	9.05
460	**276**	12.41	7.89	6.92	9.30
480	**288**	9.33	8.30	7.29	9.79
500	**300**	9.79	8.71	7.66	7.20
520	**312**	10.25	9.12	8.03	7.57
540	**324**	10.71	9.53	8.40	7.94
560	**336**	11.18	9.94	8.76	8.31
580	**348**	11.64	10.35	9.13	8.68
600	**360**	12.10	7.69	9.50	9.05
620	**372**	12.56	7.99	9.87	9.42
640	**384**	13.02	8.30	10.24	9.79
660	**396**	13.48	8.61	7.56	10.16
680	**408**	13.95	8.92	7.84	10.53
700	**420**	14.41	9.22	8.12	10.90
720	**432**	14.87	9.53	8.40	11.27
750	**450**	15.56	9.99	8.81	11.82
TOTAL L.F. IN ZONE=		600	900	1000	750

STANDARD & PEAK REST TIMES TO BE SET AT SYSTEM START-UP

ONE ZONE LEGEND:

		REST TIMES Standard (min)	Peak (min)
4	Doses/day/zone	360	216
5	Doses/day/zone	288	173
6	Doses/day/zone	240	144
7	Doses/day/zone	206	123
8	Doses/day/zone	180	108

TWO ZONE LEGEND:

		REST TIMES Standard (min)	Peak (min)
2	Doses/day/zone	360	216
3	Doses/day/zone	240	144
4	Doses/day/zone	180	108
5	Doses/day/zone	144	86
6	Doses/day/zone	120	72

Copyright ©2006

Copyright ©2006

AMERICAN MANUFACTURING

1-800-345-3132 • www.americanonsite.com

☐ **15 GPM AUTOMATIC DRIP SYSTEM**
☐ **12 GPM SEMI-AUTOMATIC DRIP SYSTEM**

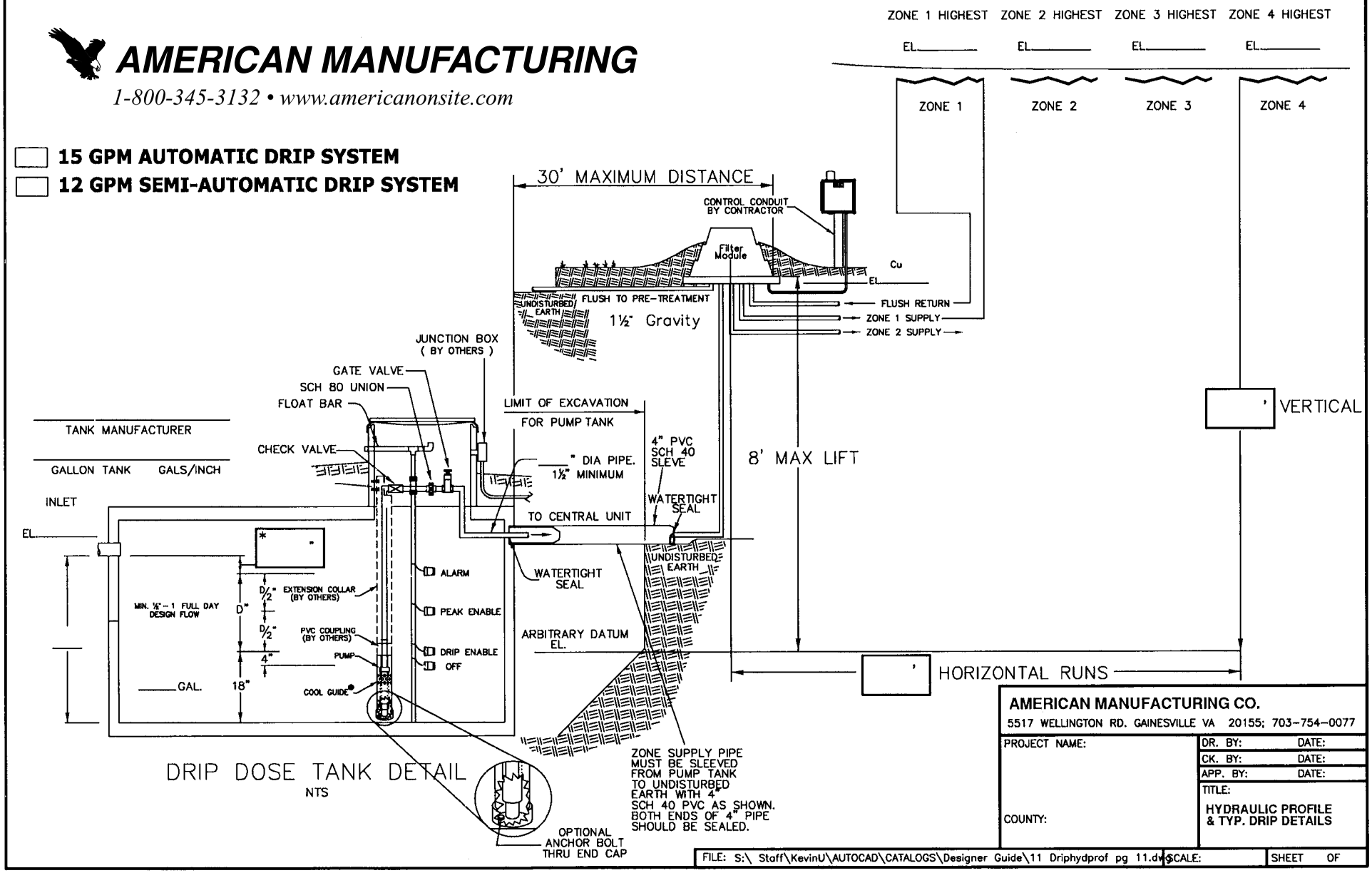

AMERICAN MANUFACTURING CO.
5517 WELLINGTON RD. GAINESVILLE VA 20155; 703-754-0077

PROJECT NAME:	DR. BY:	DATE:
	CK. BY:	DATE:
	APP. BY:	DATE:
COUNTY:	TITLE: HYDRAULIC PROFILE & TYP. DRIP DETAILS	

FILE: S:\ Staff\KevinU\AUTOCAD\CATALOGS\Designer Guide\11 Driphydprof pg 11.dwg | SCALE: | SHEET OF

S:\ Staff\KevinU\AUTOCAD\HYD&DRIP\11 Driphydprof pg 11.dwg

STANDARD DETAILS
AMERICAN "PERC-RITE®" DRIP SYSTEM

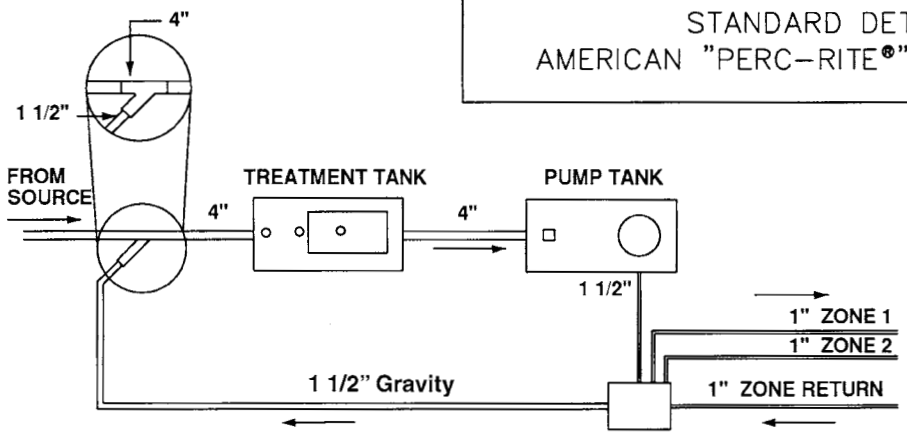

TANK EQUIPMENT AREA
SCHEMATIC PLAN

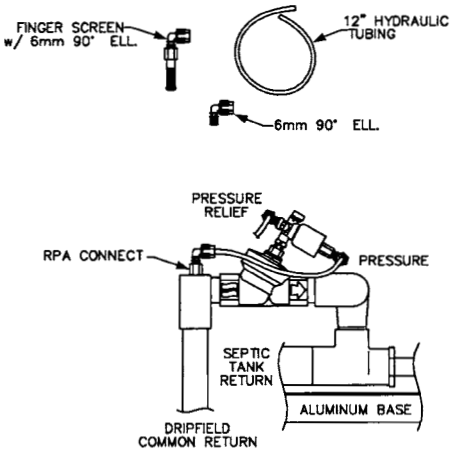

RETURN PRESSURE ASSEMBLY (RPA)
NTS

NOTE:
IN THE EVENT THE DRIP ZONES ARE OVER 10 FEET IN VERTICAL ELEVATION ABOVE THE HYDRAULIC UNIT, INSTALL A "RETURN PRESSURE ASSEMBLY." THE ASSEMBLY IS TO BE USED TO PREVENT THE RETURN LINE FROM DRAINING AFTER OR DURING A DOSE. REMOVE THE ZONE RETURN CONNECTION AND REINSTALL A SHORT 1" NIPPLE IN THE RETURN VALVE. INSTALL ASSEMBLY AS SHOWN TO THE LEFT. THE HYDRAULIC TUBING PROVIDING PRESSURE FOR THE REST OF THE UNIT MUST BE PLUGGED AND THE NEW TUBING FROM THE ASSEMBLY CONNECTED TO THE PRESSURE SIDE OF THE SELENOID.

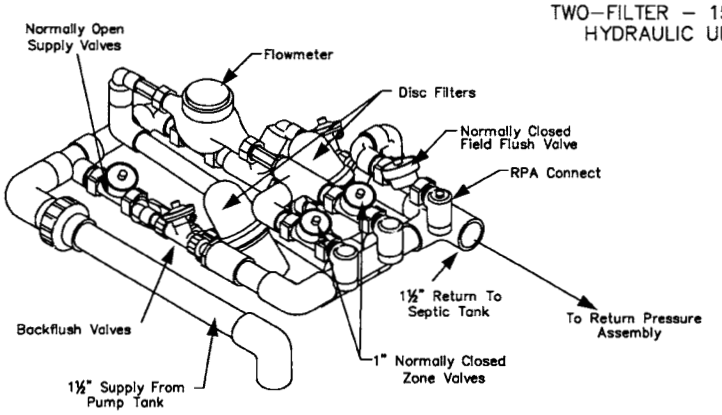

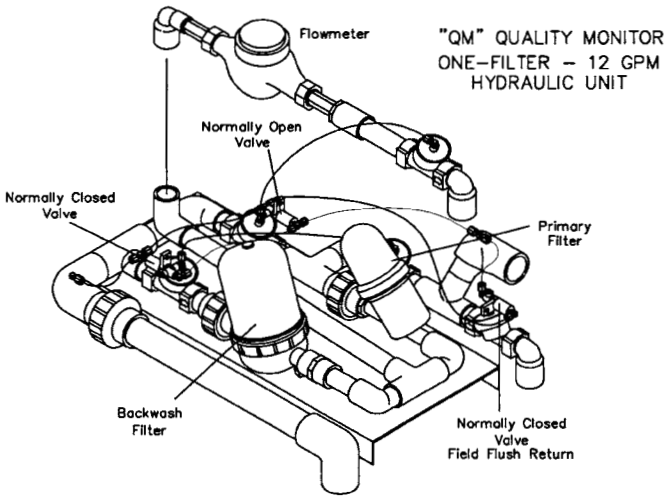

Copyright ©2006

STANDARD DETAILS
AMERICAN "PERC-RITE®" DRIP SYSTEM

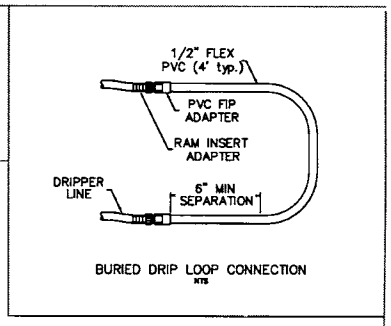

TOP FEED MANIFOLDS

USE ON ALL SITES WITH A DISCERNIBLE SLOPE TO CONTROL DRAIN DOWN FROM UPPER LATERALS TO LOWER LATERALS AFTER PUMP SHUTS OFF.

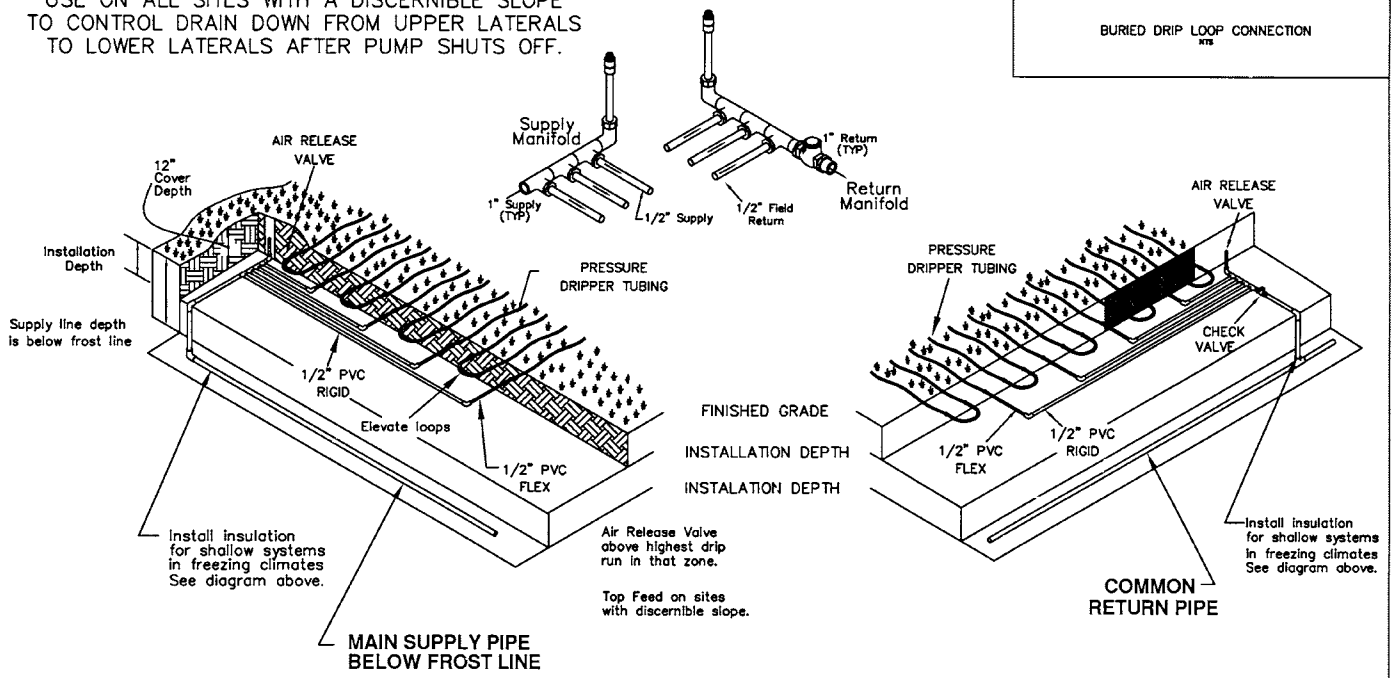

RESIDENTIAL
Patent No. 5,984,574

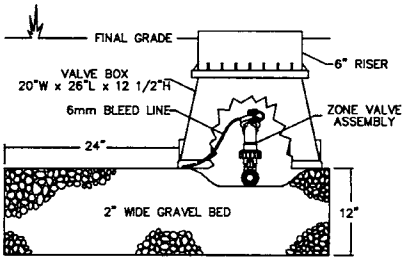

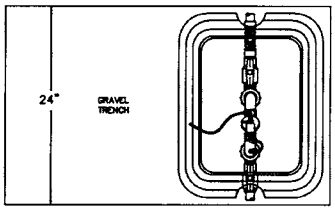

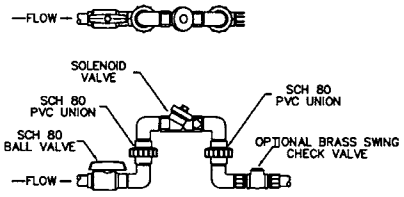

OPTIONAL
TYPICAL REMOTE ZONE VALVE
NTS

REMOTE ZONE VALVE

Typically used on drip systems when zones or portions of zones are located at a lower elevation than the "Redundant Off" level float in the pump tank. 24v is required at each "remote zone valve."

Copyright ©2006

OPERATION AND MONITORING FOR PERC-RITE® DRIP SYSTEM

The **PERC-RITE® DRIP SYSTEM** has been developed to automatically monitor operational functions. The system is designed to be easily fixed after it breaks, in other words periodic monitoring can confirm good operating conditions but there are no maintenance procedures necessary until a mechanical component needs repair. Furthermore, any malfunction or breakage of a mechanical component will result in a failure similar to any traditional system, including a wet spot in the field, a backup or a high level alarm.

The **MONITORING FREQUENCY** should be no more than traditional systems. The most important component for the operational success is owner awareness. All onsite systems have a finite hydraulic capacity. Drip systems have no storage capacity in the soil system so storage or flow equalization must be provided in the pump tank. The owner must be aware system exists and their limitations for usage.

After a successful installation and startup the system should be inspected from one to three months after the owner takes occupancy to confirm operational compliance and to inform the owner of the operational characteristics of the system. The system should then go on a schedule of annual inspections to monitor usage and inspect system for wear in order to minimize emergency service requirements. Each system is provided with an owners manual. The local dealer has a more detailed installation and maintenance supplement manual. If more than septic pretreatment is provided, more frequent monitoring may be required. Provide monitoring frequency at the rate determined by the most sensitive component.

An **OPERATIONAL CHECKLIST** is provided in the dealer's supplement manual for determining satisfactory operation of the system. The following topics are covered;

1. Field Conditions
2. Check septic tank and pump tank condition
3. Check operation of pump, control and valves.
4. Check zone dose rates.
5. Evaluate and record meter for usage.

Copyright ©2006

15 GPM AUTOMATIC *PERC-RITE®* DRIP SYSTEMS
ASD 15 SERIES - SECONDARY EFFLUENT

ASD152-S122
2 ZONE DRIP W/ SIMPLEX 2 FILTER, 2-ZONE CONTROL PANEL

LINE#	COMPONENT	DESCRIPTION	QUANTITY
	CENTRAL UNIT EQUIP PACKAGES		
1	DH2-22KIT	2 ZONE DRIP SYSTEM KIT	1
2	DP1-B9140P	SIMPLEX 2 ZONE CONTROL	1
3	PUTURB1512112W	15 GPM TURBINE	1
4	COOLGUIDE 15	LAMINAR FLOW COLLAR, 6”, 15 GPM	1
5	PUMPKITDRIP	DRIP PUMP KIT 1 1/2”	1
6	BIOLINE 1000	DRIP TUBING PER 1000 FT ROLLS	2
7	PVC12FLEX	1/2” FLEX PVC 100’	1
8	BIOINSERT12X34	BIOLINE INSERT ADAPTER 1/2” X 3/4”	50
9	PVCPRFIP12X34	FEMALE ADAPTER 12X34 SXT SCH 40	50
10	BIOCOUP	BIOLINE REPAIR COUPLING 1/2”	6
11	DH-TOPFEEDKIT	TOP FEED MANIFOLD KIT 1”	2

ASD153-S124
3 ZONE DRIP W/ SIMPLEX 2 FILTER, 4-ZONE CONTROL PANEL

LINE#	COMPONENT	DESCRIPTION	QUANTITY
	CENTRAL UNIT EQUIP PACKAGES		
1	DH2-23KIT	3 ZONE DRIP SYSTEM KIT	1
2	DP1-B9141P	SIMPLEX 4 ZONE CONTROL	1
3	PUTURB1512112W	15 GPM TURBINE	1
4	COOLGUIDE15	LAMINAR FLOW COLLAR, 6”, 15 GPM	1
5	PUMPKITDRIP	DRIP PUMP KIT 1 1/2”	1
6	BIOLINE 1000	DRIP TUBING PER 1000 FT ROLL	3
7	PVC12FLEX	1/2” FLEX PVC 100’	2
8	BIOINSERT12X34	BIOLINE INSERT ADAPTER 1/2” X 3/4”	75
9	PVCPRFIP12X34	FEMALE ADAPTER 12X34 SXT SCH 40	75
10	BIOCOUP	BIOLINE REPAIR COUPLING 1/2”	6
11	DH-TOPFEEDKIT	TOP FEED MANIFOLD KIT 1”	3

ASD154-S124
4 ZONE DRIP W/ SIMPLEX 2 FILTER, 4-ZONE CONTROL PANEL

LINE#	COMPONENT	DESCRIPTION	QUANTITY
	CENTRAL UNIT EQUIP PACKAGES		
1	DH2-24KIT	4 ZONE DRIP SYSTEM KIT	1
2	DP1-B9141P	SIMPLEX 4 ZONE CONTROL	1
3	PUTURB1512112W	15 GPM TURBINE	1
4	COOLGUIDE15	LAMINAR FLOW COLLAR, 6”, 15 GPM	1
5	PUMPKITDRIP	DRIP PUMP KIT 1 1/2”	1
6	BIOLINE 1000	DRIP TUBING PER 1000 FT ROLL	4
7	PVC12FLEX	1/2” FLEX PVC 100’	2
8	BIOINSERT12X34	BIOLINE INSERT ADAPTER 1/2” X 3/4”	100
9	PVCPRFIP12X34	FEMALE ADAPTER 12X34 SXT SCH 40	100
10	BIOCOUP	BIOLINE REPAIR COUPLING 1/2”	6
11	DH-TOPFEEDKIT	TOP FEED MANIFOLD KIT 1”	4

ASD153-D124
3 ZONE DRIP W/ DUPLEX 2 FILTER, 4-ZONE CONTROL PANEL

LINE#	COMPONENT	DESCRIPTION	QUANTITY
	CENTRAL UNIT EQUIP PACKAGES		
1	DH2-23KIT	3 ZONE DRIP SYSTEM KIT	1
2	DP1-B9146P	DUPLEX 4 ZONE CONTROL PANEL	1
3	PUTURB1512112W	15 GPM TURBINE	2
4	COOLGUIDE15	LAMINAR FLOW COLLAR, 6”, 15 GPM	2
5	PUMPKITDRIPDX	DRIP PUMP KIT 1 1/2” DUPLEX	1
6	BIOLINE1000	DRIP TUBING PER 1000 FT ROLL	3
7	PVC12FLEX	1/2” FLEX PVC 100’	2
8	BIOINSERT12X34	BIOLINE INSERT ADAPTER 1/2” X 3/4”	75
9	PVCPRFIP12X34	FEMALE ADAPTER 12X34 SXT SCH 40	75
10	BIOCOUP	BIOLINE REPAIR COUPLING, 1/2”	6
11	DH-TOPFEEDKIT	TOP FEED MANIFOLD KIT 1”	3

ASD154-D124
4 ZONE DRIP W/ DUPLEX 2 FILTER, 4-ZONE CONTROL PANEL

LINE#	COMPONENT	DESCRIPTION	QUANTITY
	CENTRAL UNIT EQUIP PACKAGES		
1	DH2-24KIT	4 ZONE DRIP SYSTEM KIT	1
2	DP1-B9146P	DUPLEX 4 ZONE CONTROL PANEL	1
3	PUTURB1512112W	15 GPM TURBINE	2
4	COOLGUIDE15	LAMINAR FLOW COLLAR, 6”, 15 GPM	2
5	PUMPKITDRIPDX	DRIP PUMP KIT 1 1/2” DUPLEX	1
6	BIOLINE 1000	DRIP TUBING PER 1000 FT ROLL	4
7	PVC12FLEX	1/2” FLEX PVC 100’	2
8	BIOINSERT12X34	BIOLINE INSERT ADAPTER 1/2” X 3/4”	100
9	PVCPRFIP12X34	FEMALE ADAPTER 12X34 SXT SCH 40	100
10	BIOCOUP	BIOLINE REPAIR COUPLING, 1/2”	6
11	DH-TOPFEEDKIT	TOP FEED MANIFOLD KIT 1”	4

ASD151-S124
2 REMOTE ZONE DRIP W/ SIMPLEX 2 FILTER, 4-ZONE CONTROL

LINE#	COMPONENT	DESCRIPTION	QUANTITY
	CENTRAL UNIT EQUIP PACKAGES		
1	DH2-21KIT	MASTER VALVE DRIP SYSTEM KIT	1
2	DP1-B9157P	SIMPLEX 4 ZONE W/MASTER VALVE	1
3	PUTURB1512112W	15 GPM TURBINE	1
4	COOLGUIDE15	LAMINAR FLOW COLLAR, 6”, 15 GPM	1
5	PUMPKITDRIP	DRIP PUMP KIT 1 1/2”	1
6	ZONEVALVE 1	REMOTE ZONE VALVE 1” VLV X 1” PIPE	2
7	BIOLINE1000	DRIP TUBING PER 1000 FT ROLL	2
8	PVC12FLEX	1/2” FLEX PVC 100’	1
9	BIOINSERT12X34	BIOLINE INSERT ADAPTER 1/2” X 3/4”	50
10	PVCPRFIP12X34	FEMALE ADAPTER 12X34 SXT SCH 40	50
11	BIOCOUP	BIOLINE REPAIR COUPLING, 1/2”	6
12	DH-TOPFEEDKIT	TOP FEED MANIFOLD KIT 1”	2

AMERICAN
Manufacturing Company, Inc.
www.americanonsite.com

Copyright ©2006

12 GPM AUTOMATIC SEMI-AUTOMATIC *PERC-RITE®* DRIP SYSTEMS

QUALITY MONITOR "QM" SERIES - SECONDARY EFFLUENT

AMD151-S121

1 ZONE SIMPLEX MANUAL CLEAN INSERT & LCD CONTROL

CONTENT	DESCRIPTION	QUANTITY
DPO-B9114	1 ZONE SIMPLEX LCD CONTROL	1
DH0-1MKIT	1-1/2" MANUAL FILTER ASSY W/PUMP DISC.	1
DH-FLOWFLUSHKIT	FIELD FLUSH & FLOW METER KIT W/VB	1
DH-TOPFEEDKIT1	TOP FEED MANIFOLD KIT SUPPLY & RETURN	1
BIOLINE 1000	DRIP TUBING PER 1000 FT ROLL	1
PVC12FLEX	1/2 X 100 PVC FLEX TUBE/DRIP	1
PVCPRFIP12X34	1/2 X 3/4 PVC PRESS S X FIP AD	25
BIOINSERT12X34	1/2 BIOLINE X 3/4 MIP DRIP ADAPTER	25
BIOCOUP	BIOLINE REPAIR COUPLING 1/2 IN	3
COOLGUIDE15	LAMINAR FLOW COOLING GUIDE	1
PUTURB1512112W	15 GPM TURBINE PUMP 1/2HP, 115V, 2 WIRE	1

ABD121-S121

1 ZONE QM SKID MOUNT WITH LCD CONTROL

CONTENT	DESCRIPTION	QUANTITY
DPO-B9114	1 ZONE SIMPLEX LCD CONTROL	1
DH0-2BKIT	2 FILTER, 1 ZONE QM KIT	1
DH-TOPFEEDKIT1	TOP FEED MANIFOLD KIT SUPPLY & RETURN	1
BIOLINE 1000	DRIP TUBING PER 1000 FT ROLL	1
PVC12FLEX	1/2 X 100 PVC FLEX TUBE/DRIP	1
PVCPRFIP12X34	1/2 X 3/4 PVC PRESS S X FIP AD	25
BIOINSERT12X34	1/2 BIOLINE X 3/4 MIP DRIP ADAPTER	25
BIOCOUP	BIOLINE REPAIR COUPLING	3
COOLGUIDE15	LAMINAR FLOW COOLING GUIDE	1
PUTURB1512112W	15 GPM TURBINE PUMP 1/2HP, 115V, 2 WIRE	1
PUMPKITDRIP	1-1/2 IN DRIP PUMP KIT	1

ABD121-S122

2 ZONE QM SKID MOUNT WITH PLC PANEL

CONTENT	DESCRIPTION	QUANTITY
DPI-B9158	2 ZONE, SIMPLEX PLC CONTROL	1
DH0-2BKIT	2 FILTER, 2 ZONE QM KIT	1
DH-TOPFEEDKIT1	TOP FEED MINIFOLD KIT SUPPLY & RETURN	2
BIOLINE 1000	DRIP TUBING PER 1000 FT ROLL	2
PVC12FLEX	1/2 X 100 PVC FLEX TUBE/DRIP	1
PVCPRFIP12X34	1/2 X 3/4 PVC PRESS S X FIP AD	50
BIOINSERT12X34	1/2 BIOLINE X 3/4 MIP DRIP ADAPTER	50
BIOCOUP	BIOLINE REPAIR COUPLING 1/2 IN	3
COOLGUIDE15	LAMINAR FLOW COOLING GUIDE	1
PUTURB1512112W	15 GPM TURBINE PUMP 1/2HP, 115V, 2 WIRE	1
PUMPKITDRIP	1-1/2 IN DRIP PUMP KIT	1
DH-SOLVLV1KIT	1" SOLINOID VALVE WITH VALVE BOX	2

ABD121-S121SV2

2 ZONE QM SKID WITH SEQUENCER & LCD CONTROL

CONTENT	DESCRIPTION	QUANTITY
DPO-B9114	1 ZONE SIMPLEX LCD CONTROL	1
DH0-2RKIT	2 FILTER, 1 ZONE QM INSERT KIT	1
DH-TOPFEEDKIT1	TOP FEED MANIFOLD KIT SUPPLY & RETURN	2
BIOLINE 1000	DRIP TUBING PER 1000 FT ROLL	2
PVC12FLEX	1/2 X 100 PVC FLEX TUBE/DRIP	1
PVCPRFIP12X34	1/2 X 3/4 PVC PRESS S X FIP AD	50
BIOINSERT12X34	1/2 BIOLINE X 3/4 MIP DRIP ADAPTER	50
BIOCOUP	BIOLINE REPAIR COUPLING 1/2 IN	3
COOLGUIDE15	LAMINAR FLOW COOLING GUIDE	1
PUTURB1512112W	15 GPM TURBINE PUMP 1/2HP, 115V, 2 WIRE	1
SEQUENCEVLV2	TWO ZONE SEQUENCE VALVE	1
PUMPKITDRIP	1-1/2 IN DRIP PUMP KIT	1

Copyright ©2006

ELECTRICAL AND OPERATIONAL SPECIFICATIONS

CUST. NAME: _____
JOB NAME: _____
JOB NUMBER: _____
PERMIT INFO: _____
_____
_____
DESIGNER NAME: _____

SYSTEM INFORMATION

GPD _____
MAX GPM _____
NO. ZONES _____
ZONE DETAIL NO. _____
DOSES PER DAY _____

MODEL NUMBER		RUN TIME
SECONDARY EFFLUENT		
1. AMD151-S121	_____	_____
2. ABD121-S121	_____	_____
3. ABD122-S122	_____	_____
4. ABD121-S121SV2	_____	_____
5. ASD152-S122	_____	_____
6. ASD153-S124	_____	_____
7. ASD154-S124	_____	_____
8. ASD153-D124	_____	_____
9. ASD154-D124	_____	_____
10.ASD151-S124	_____	_____

Check the model number which has the number of zones per the zone detail. Record the run Time from the Run Time Table.

SPECIAL SPECIFICATIONS
(use back if necessary)

_____
_____

ELECTRICAL CIRCUIT REQUIREMENTS

1. PUMP 1/2 HP, 115V, 1 PHASE
2. CONTROL 15 AMP, 115V, 1 PHASE
3. OTHER _____

OPTIONS

Return Pressure Assembly _____ (Y)

Use pressure assembly anytime the lift from filter unit to drip field is discernable and using a valve box model.

Sequence Valve _____ (Y)
Drain Down Assembly _____ (Y)
Blower Cut-out _____ (Y)
Heater 225w _____ (Y)
Valve Box (insulated) _____ (Y)
Tubing Rolls (500') _____
Tubing Rolls (1000') _____

SPECIAL INSTRUCTIONS
(use back if necessary)

_____
_____
_____
_____
_____
_____

AUTHORIZED SIGNATURE

_____ Date: _____
( )Owner ( )Agent

NOTE: ATTACHED SHOULD BE A ZONE DETAIL AND SITE PLAN.

AMERICAN USE ONLY

Sales Order Number _____
File No. _____
SBT Input BY _____

Copyright ©2006

DESIGN SUBMITTAL PROCEDURES

Design and submittal of a Perc-Rite® system is very simple using the following procedures;

1. Fill out design submittal form for jurisdiction. The form may be generic, state adjusted, or locally required.
2. Provide a separate site plan or sketch.
3. Print out determined zone detail.
4. Submit the proper number of copies to the jurisdiction of authority.

I. Siting criteria:

a. The American Perc-Rite® Subsurface Drip System may be utilized on sites that meet the following criteria:
   i. Sites classified suitable or provisionally suitable in accordance with Rules .1939-.1948;
   ii. Sites reclassified to be provisionally suitable in accordance with Rules .1956(1), (2), (4), (5) or (6a);
   iii. Sites meeting the criteria for low pressure pipe systems in accordance with Rule .1957(a)(2); or
   iv. Sites meeting the criteria for new or existing fill, in accordance with Rule .1957(b). The system is considered a fill system when all or part of the drip tubing shall be installed in fill material. For existing fill systems, the minimum vertical separation distance between the drip tubing or installed trench bottom and any soil wetness condition or any soil horizon unsuitable as to soil structure, clay mineralogy, organic soil, rock or saprolite shall be 18 inches.

b. Required vertical separation requirements shall be measured from the bottom of the drip tubing, or the installed trench bottom, whichever is deeper. All reductions in vertical separation allowed in the Rules and for other Approved Innovative Systems based on the use of low pressure pipe or drip distribution systems shall apply (per recommendation of an NC Licensed Soil Scientist, as applicable).

c. The minimum horizontal setback requirements as allowed for aerobic treatment units in accordance with Rule .1957(c)(5)(a), or as allowed in conjunction with the use of other Approved Innovative Systems, shall be met, as applicable.

II. Design criteria:

a. Pretreatment:
   i. Anaerobic: The drip emitter system shall be preceded by a pretreatment process designed to reduce the wastewater biochemical oxygen demand (BOD) and total suspended solids (TSS) concentrations to a maximum of 250 milligrams per liter (mg/l) each. This level of pretreatment may be achieved by properly designed Septic Tanks approved in accordance with Rules .1952 through .1954, Approved Innovative Pretreatment Systems, or approved equal.
   ii. Aerobic: The drip emitter system shall be preceded by a pretreatment process designed to reduce the wastewater biochemical oxygen demand (BOD) and total suspended solids (TSS) concentrations to a maximum of 30 milligrams per liter (mg/l) each. This level of pretreatment may be achieved by properly designed Aerobic Treatment Units (ATUs) approved in accordance with Rule .1957(c), Approved Innovative Pretreatment Systems, or approved equal.

b. Dosing tank:
   i. The dosing tank and dosing system shall meet the design and construction criteria of Rules .1952-.1954, except that the minimum liquid capacity shall not be less than the total liquid capacity of the septic tank that would be required for this system.
   ii. Level control floats in the dosing tank shall be adjustable and replaceable from the ground surface without requiring entrance into the tank.
   iii. The requirement for a separate high water alarm that is audible and visible by system users shall be met, in conjunction with any required self-monitoring features of the American Perc-Rite® system.

AMERICAN MANUFACTURING COMPANY - DATA CENTER

ONLINE WARRANTY REGISTRATION

American provides online warranty tracking and regulatory reporting. You must be an authorized user to access this feature. Go to *www.americanonsite.com*, then click on Data Center at the bottom of the menu on the left. The Data Center can be used by service providers to keep up-to-date information on all systems. It is user friendly and easily accessible anywhere an internet connection is available.

Copyright ©2006

WARRANTY

AMERICAN MANUFACTURING LIMITED WARRANTY For one year (12 months) after the date of purchase, American Manufacturing Company, Inc. will repair or replace any product or portion thereof which proves to be defective due to materials or workmanship of American Manufacturing. We reserve the right to repair or replace defective materials at our discretion. This warranty does not cover the following conditions:

1. Defects or problems caused by improper installation or maintenance of materials.

2. Abuse, neglect or accidental damage of products.

3. Normal maintenance or upkeep of products.

4. Lightning, war, floods, or other acts beyond our control.

5. Misapplication of our products for their designed purpose, or misapplication according to local, state or national codes when in effect.

Defective or warranted materials must be returned to us or a place designated by American Manufacturing. All returns must be accompanied by a return authorization number supplied by American Manufacturing.

American Manufacturing will in no way be responsible for any losses or damages incurred by failure of equipment, parts or service. NOTE: Some states do not allow exclusion of damages so this may not apply to you. There are no other warranties written or implied.

Copyright ©2006

AMERICAN

Manufacturing Company, Inc.

www.americanonsite.com

AMERICAN MANUFACTURING Company, Inc.

www.americanonsite.com

American Manufacturing Company, Inc. manufactures many specialty Onsite Wastewater products including the **Cool Guide™, Bull Run® Valve, Dial-A-Flow™, Distribution Boxes, Perc-Rite® drip equipment, Timer Controls, Accessories, etc.** American also supplies as an Original Equipment Manufacturer (OEM) with many other products unique to the Onsite Industry.

Cool Guide™

Bull Run™ Valve

Control Panels

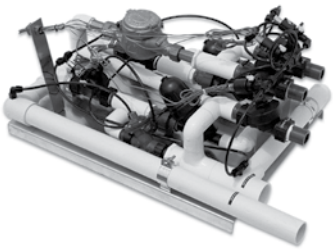

Hydraulic Unit

Dial-A-Flow™

Drip Tubing

Toll Free: *1-800-345-3132*

P.O. Box 549, Manassas, VA 20108